STARTECH
Machinery

CNC Turn-Mill Machine

Linear Way Series

FNL-220Y

FNL-220LY

FNL-220LSY

FNL-220LS

FNL-220LYSMC

FNL-220Y

FNL-220LY

FNL-220LSY

FNL-220LS

FNL-220LSMC

CNC Turn-Mill Machine

FNL-220 series turn-mill machine is integrated with innovative features 30-degree slant bed, roller type linear guideways and 60-degree compound Y axis. Roller type linear guideways ensure high accuracy performance during high speed machining and provide 30% stronger rigidity than ball type guideways. With the biggest Y axis travel (±55mm) in same class, high torque live tooling and full C axis for main and sub-spindle, FNL-220 series makes the machining of complex parts easier and increases the throughput.

Machine Structure

FNL Linear Way Series

Designed with dual 30-degree slant bed and roller linear ways structure that delivers low-friction, high-rigidity and high-loading capacity, it reduces vibration and stick-slip issues efficiently.

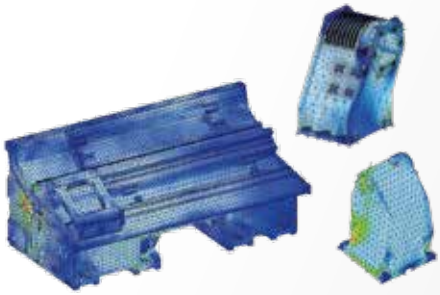

FEA (FEM) Analysis

Dual 30-degree slant bed provides superior rigidity eliminating deformation and ensuring long-term stability.

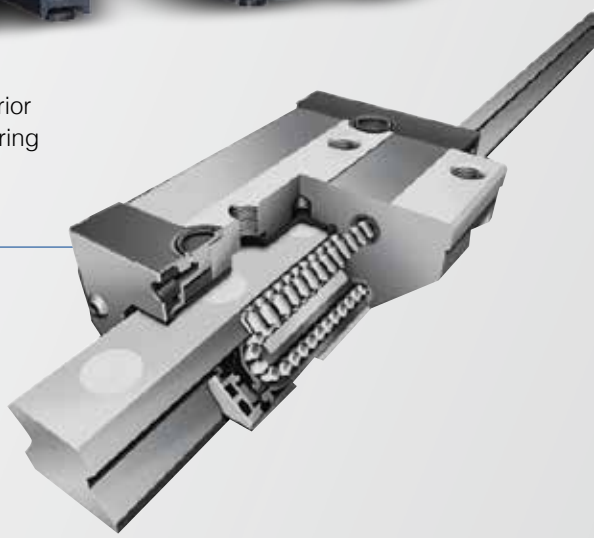

Extremely Rigid Structure

One-piece Meehanite cast iron machine base and the wide span in-between linear guideways ensure optimum stability when machining heavy loads.

Controller

FANUC

- Simultaneous controlled axes: 4
- Minimum programmable increment: 0.001mm
- Mirror Image
- Backlash compensation
- Pitch error compensation

SIEMENS

10.4" TFT LCD makes the operation easier. Optional SHOPTURN function provides graphical user interface, the operators could easily complete the programming without G codes.

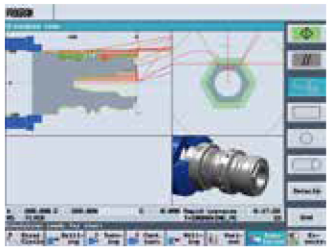

- Dual-display simultaneous simulation
- 3D simulation
- 3D section view

FNL series

Machining Range

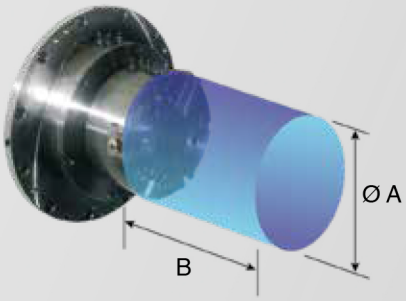

	Ø A Max. cutting diameter (mm)	B Max. cutting length (mm)	C1, C2 Travel (degree)
FNL-220LSMC	330	510	360
FNL-220LS	330	510	-
FNL-220LSY	270	510	360
FNL-220LY	270	510	360
FNL-220Y	270	300	360

Main & Sub-spindle

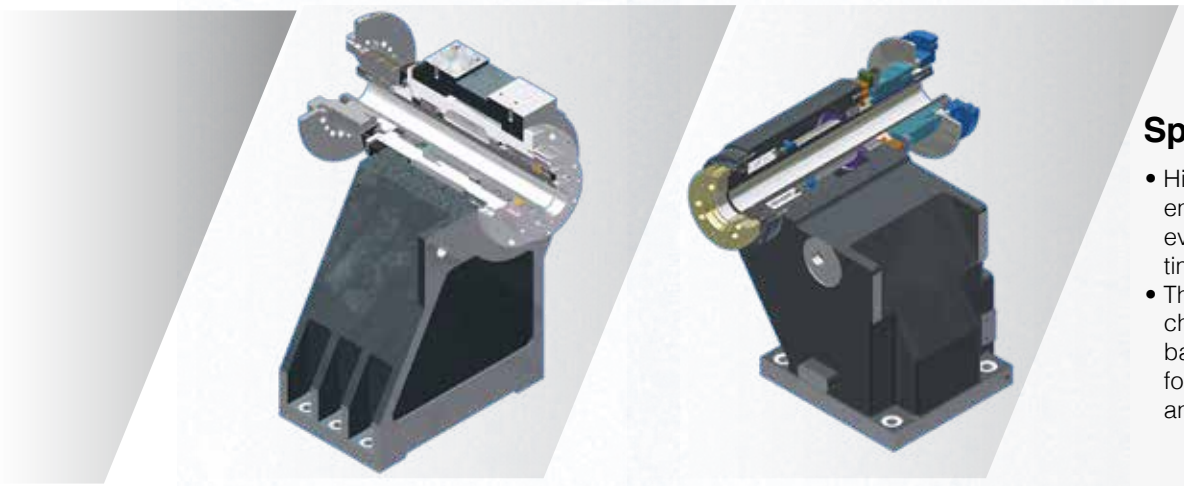

Spindle Capacity

- High quality angular ball bearings ensure excellent cutting precision even during extended periods of time.
- The spindle is designed with 8" chuck, spindle bore 62mm and bar capacity 52mm. It's available for optional spindle bore 77mm and bar capacity 65mm.

Main Spindle (Belt type)

- High-precision spindle
- Fanuc 20HP AC spindle motor

Sub-spindle

- C axis positioning resolution of main & sub-spindle: 0.001°
- Synchronization between main and sub-spindle at any rotation speed can be programmed to perform part transfer for secondary machining to enhance production efficiency and reduce idle time.

Torque Diagram

FNL-220LSY Main Spindle

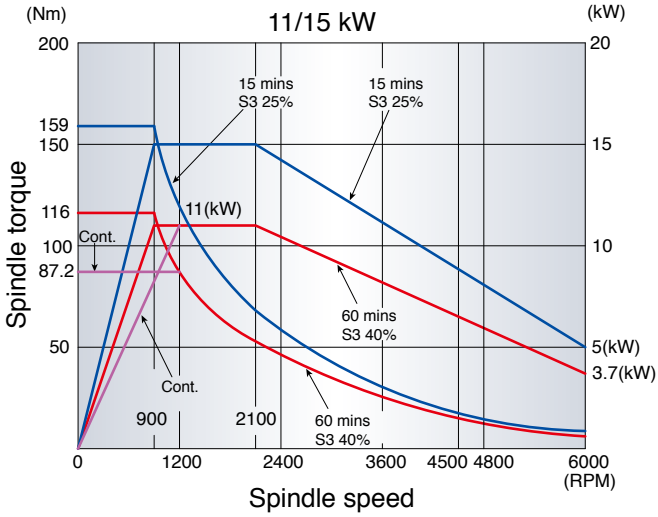

FNL-220LSY Live Tooling

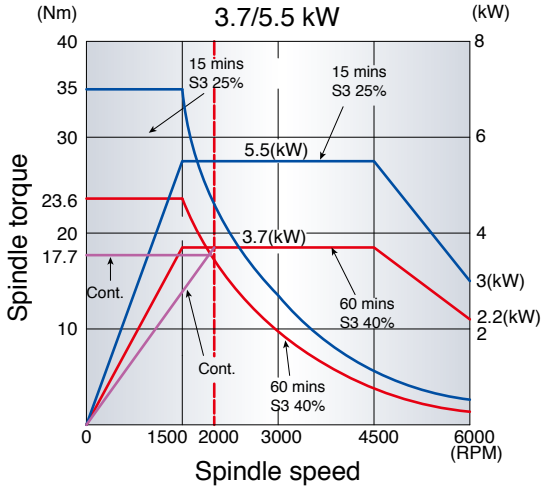

FNL-220LSY Sub-spindle

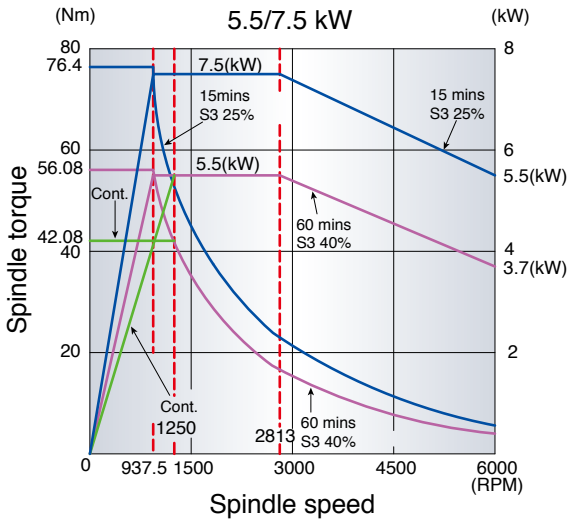

FNL-220LS(MC) Sub-spindle

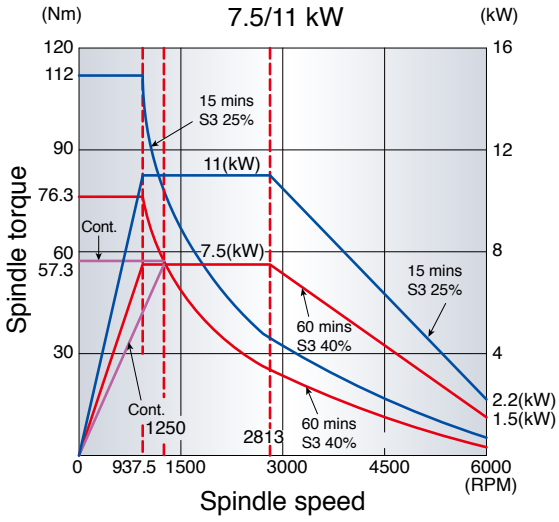

Spindle Structure

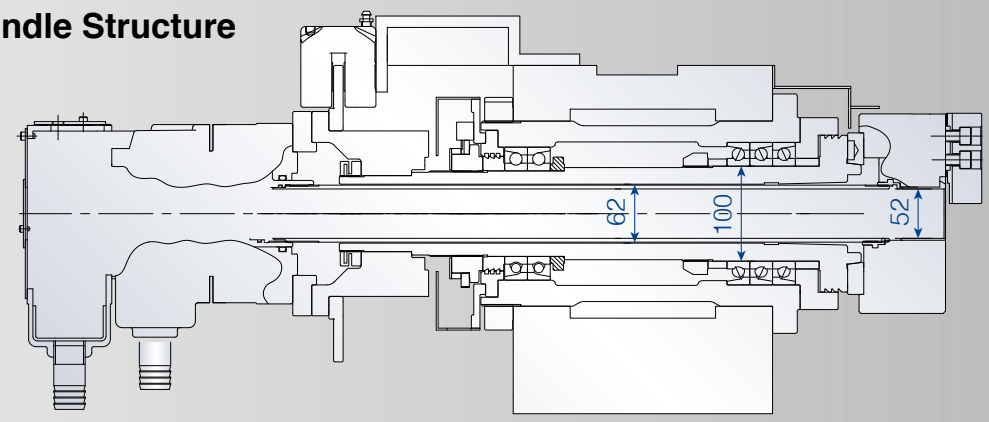

Turret & Live Tooling Torque Diagram

12/16 Stations, BMT45 Live Tooling Turret

- Equipped with powerful servo turret for heavy-duty machining. Its superior rigid structure can meet strict requirement for machining efficiency.
- All tool stations are live with max. 6,000 RPM tooling speed. The fast servo indexing can reach 0.16 second in T-T.
- 3.7/5kW live tooling motor can meet any difficult milling, drilling and tapping application.
- Hirth coupling features fast locking, self-centering and accurate repetition connection.

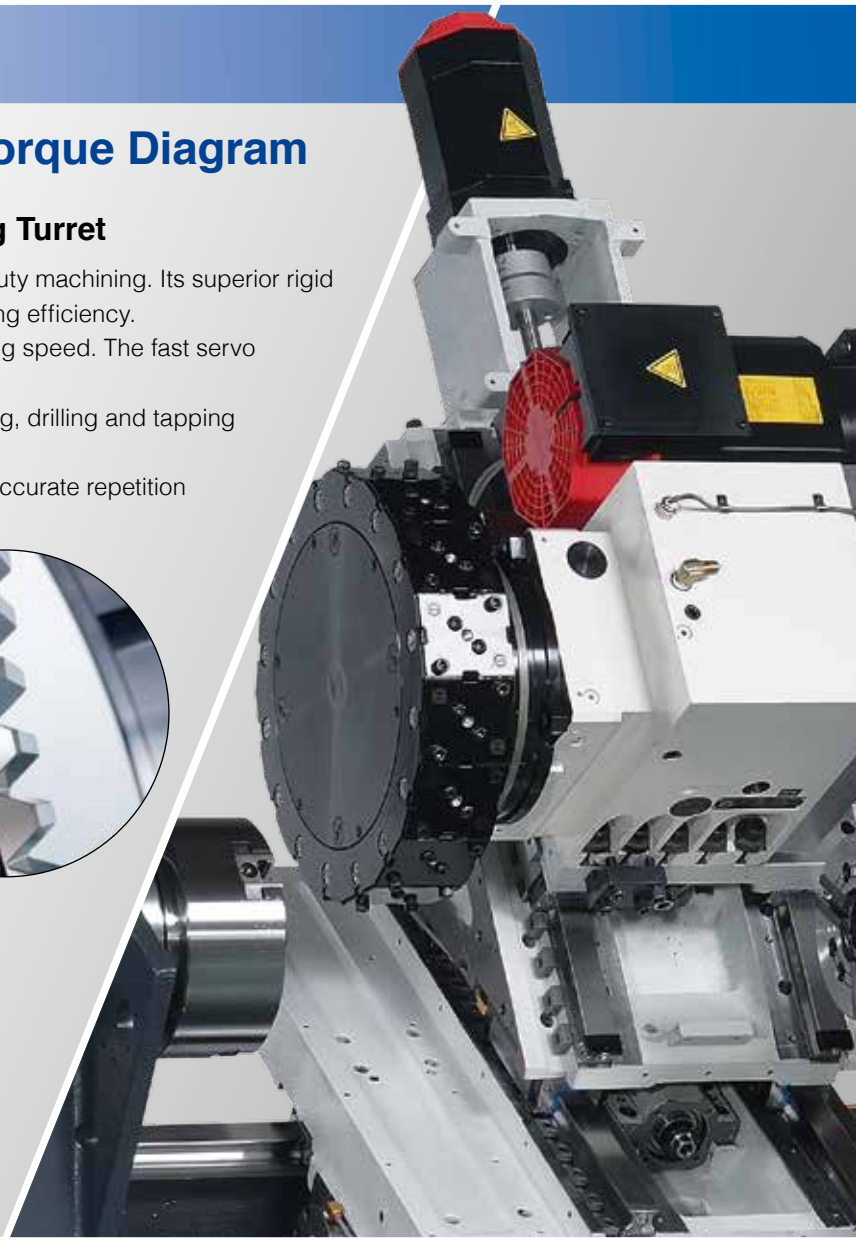

Machining Zone

Unit: mm

FNL-220Y

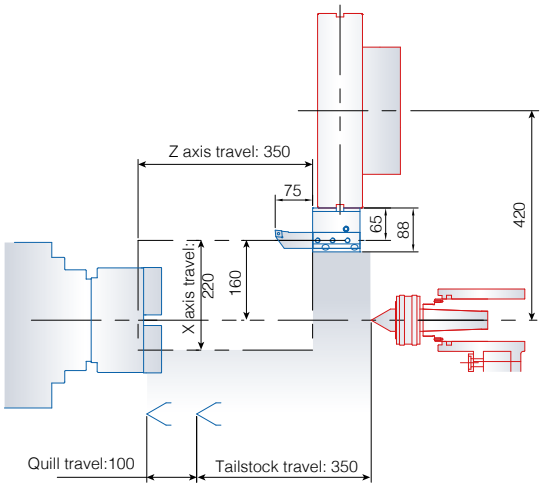

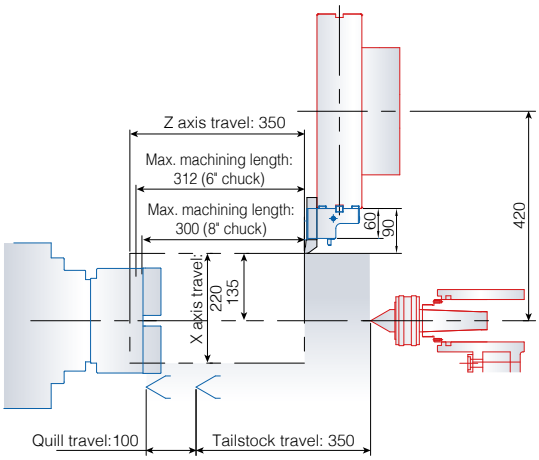

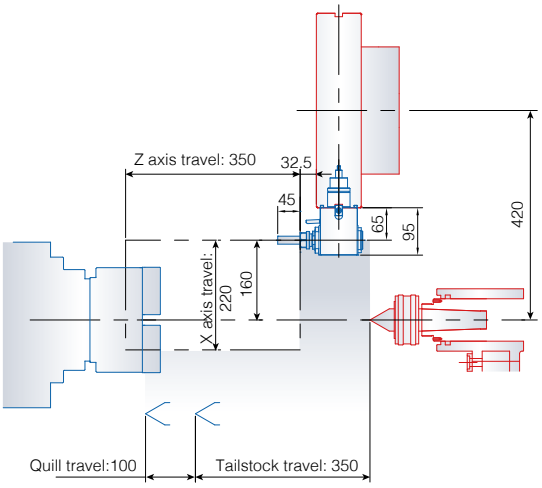

FNL-220LY

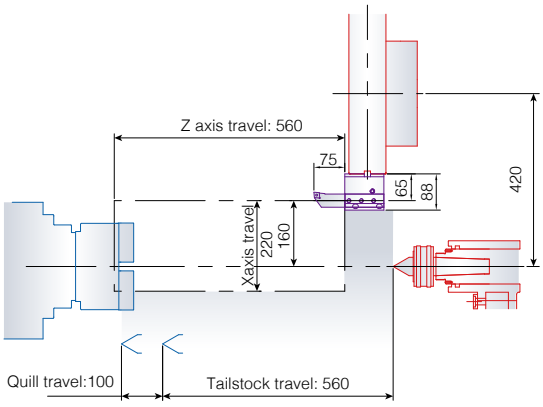

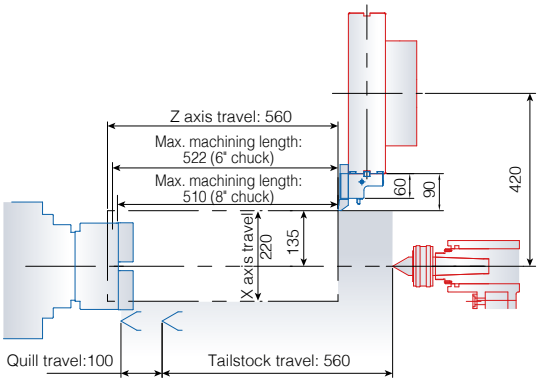

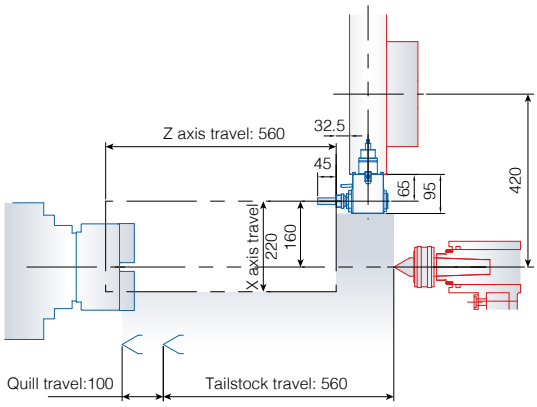

Machining Zone

FNL-220LSY

Unit: mm

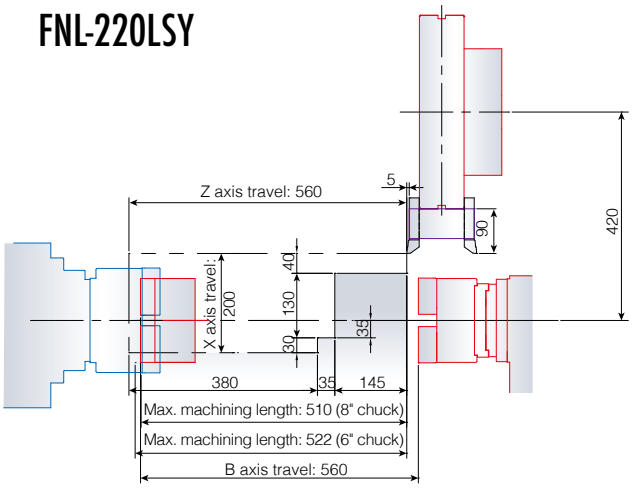

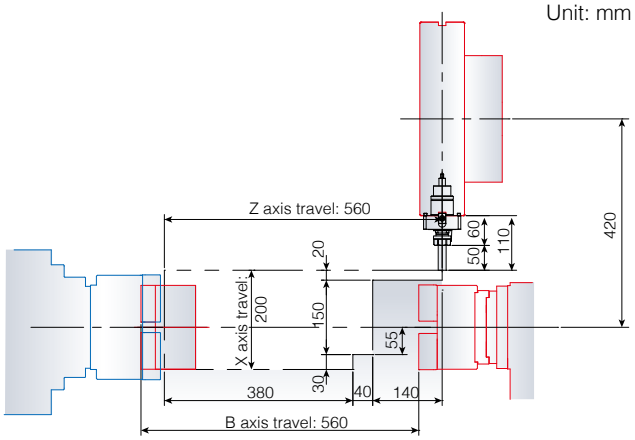

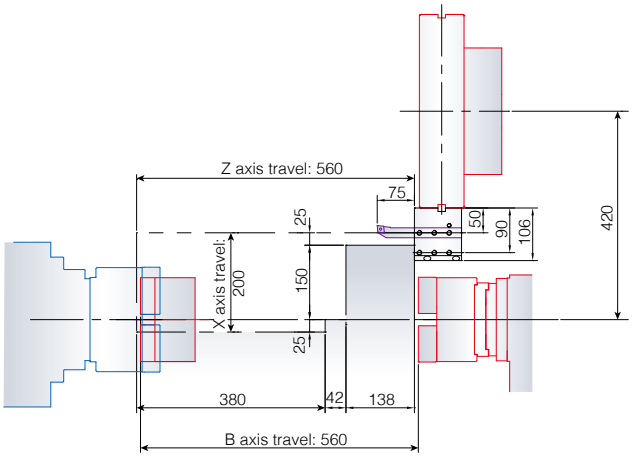

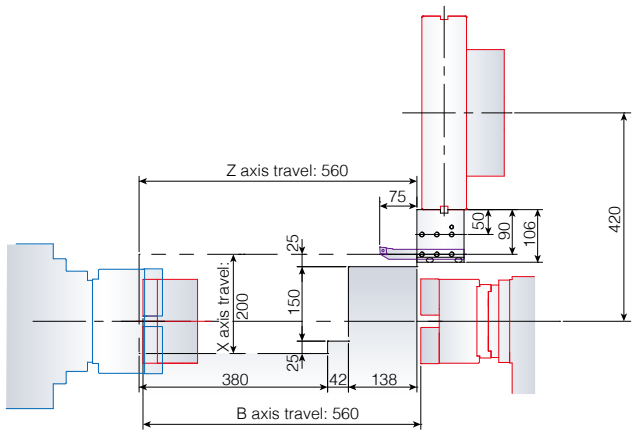

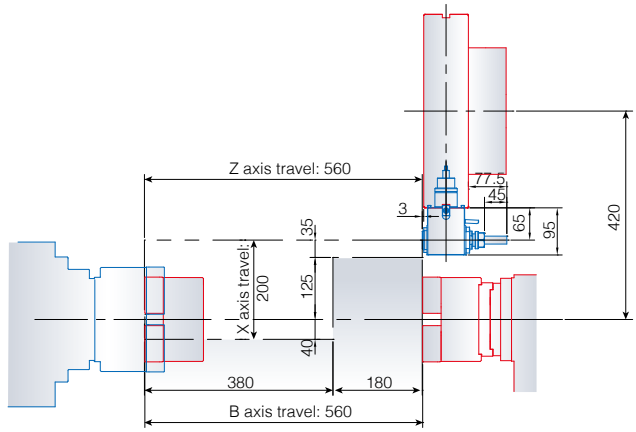

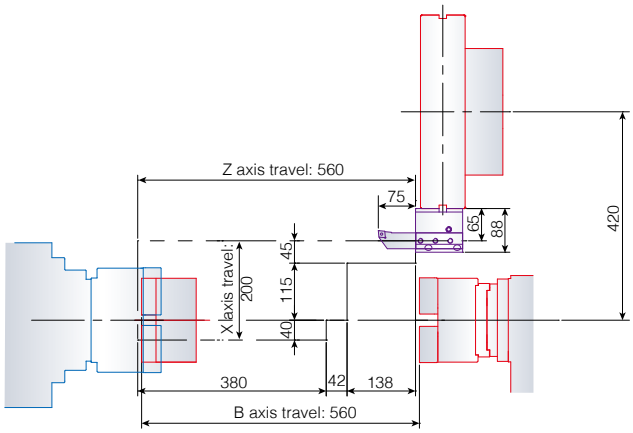

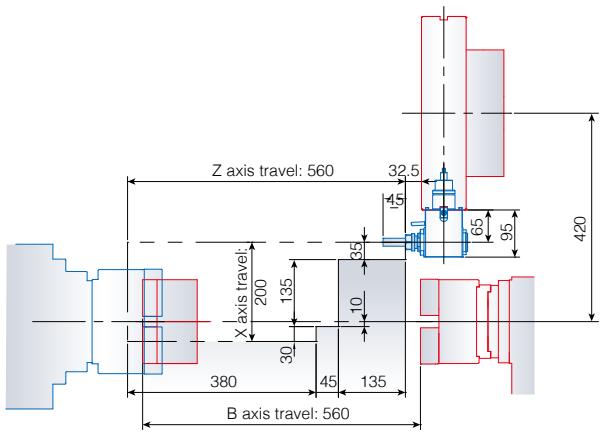

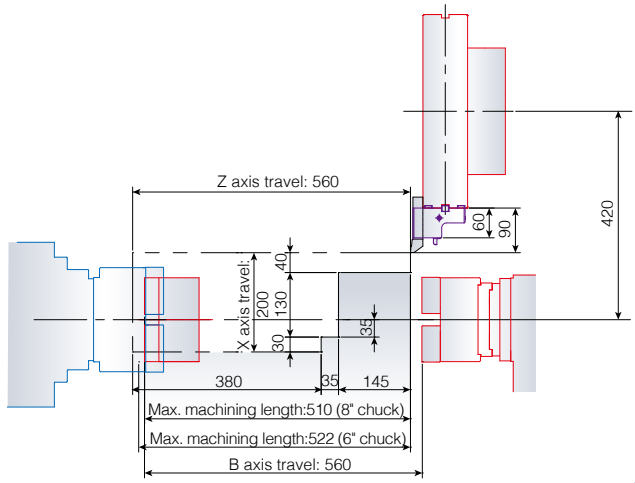

FNL-220LS / 220LSMC

Unit: mm

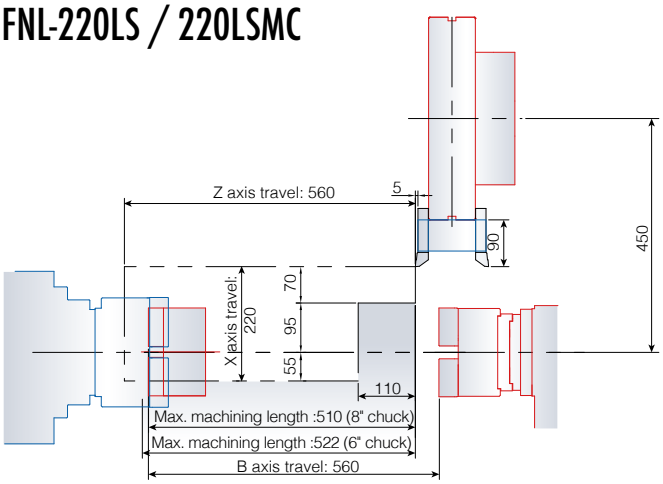

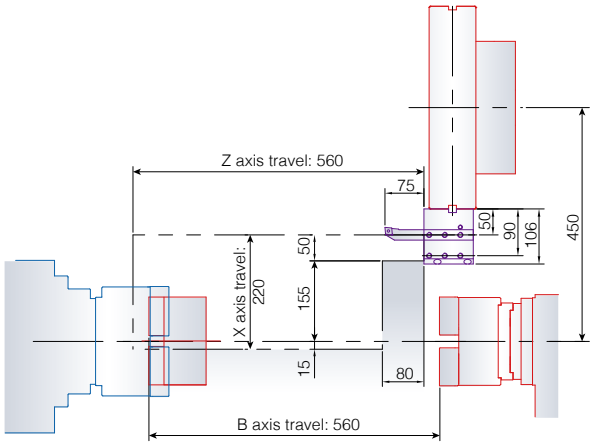

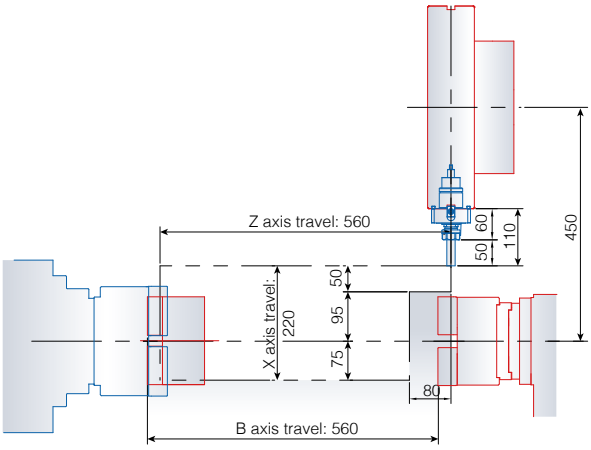

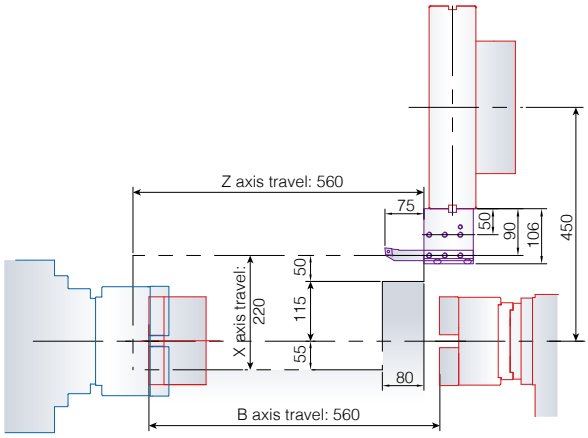

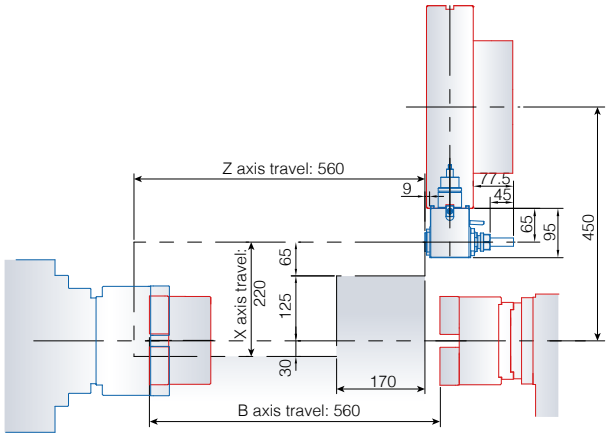

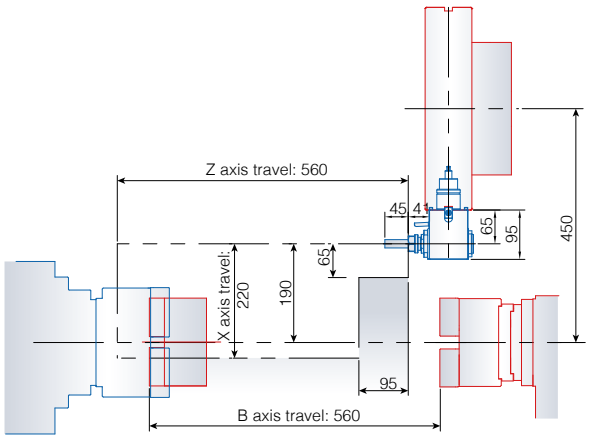

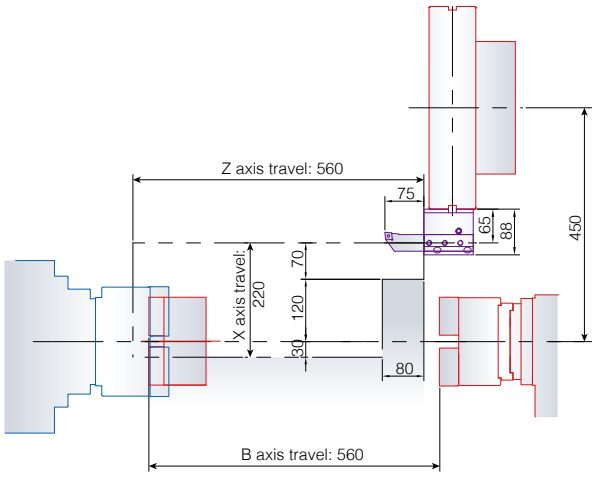

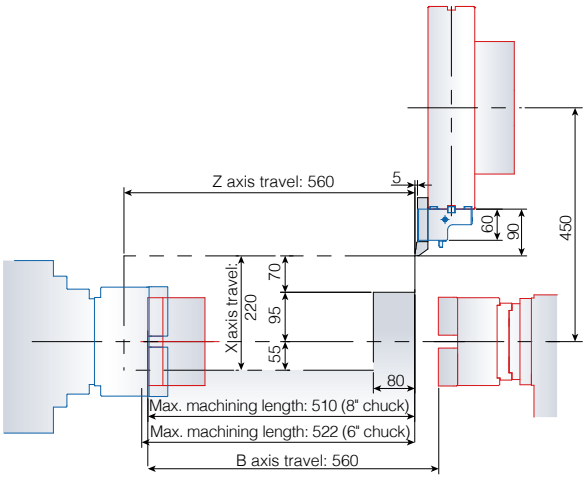

Tooling System

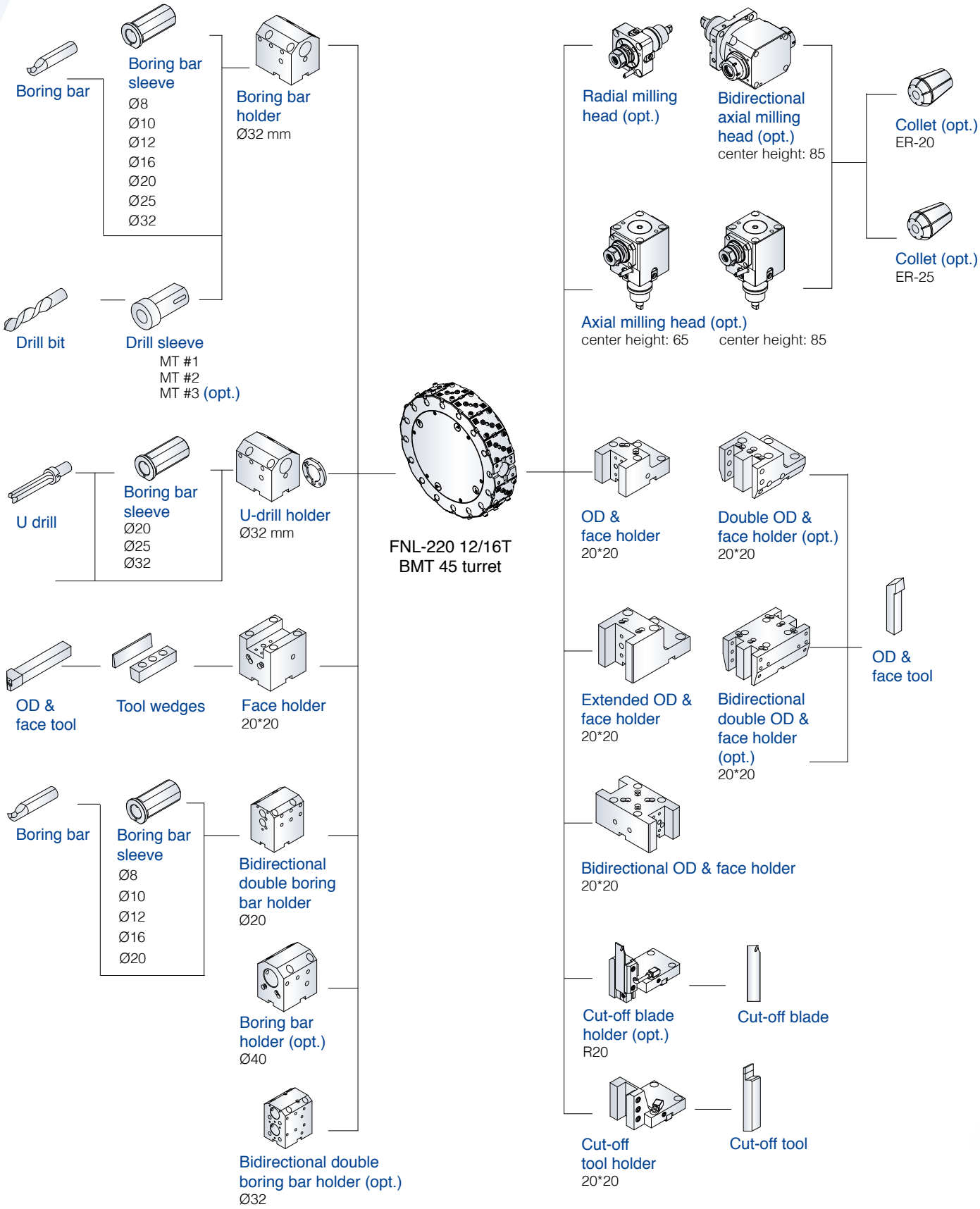

Tooling Interference

Unit: mm

FNL-220Y / LY / LSY

BMT45(16T)

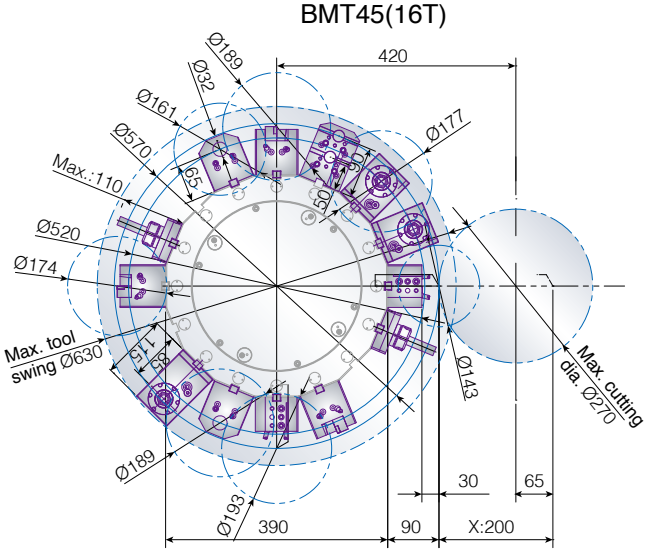

BMT45(12T)

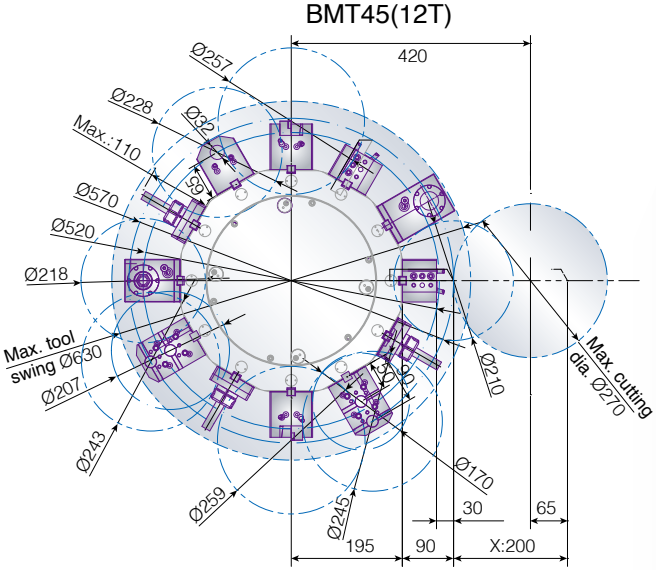

FNL-220LS / 220LSMC

BMT45(16T)

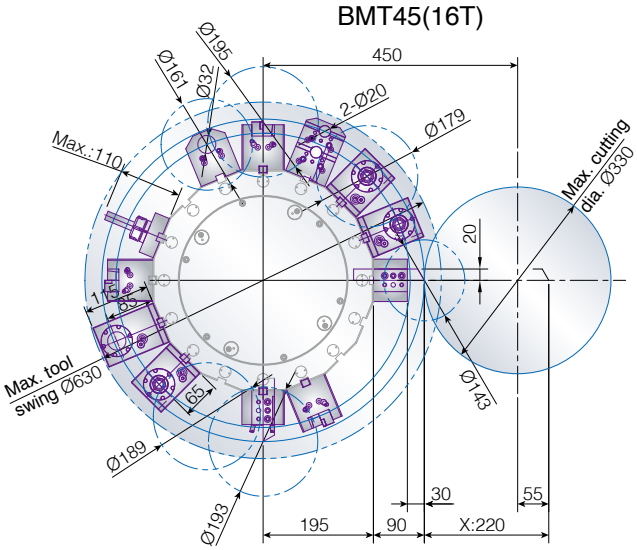

BMT45(12T)

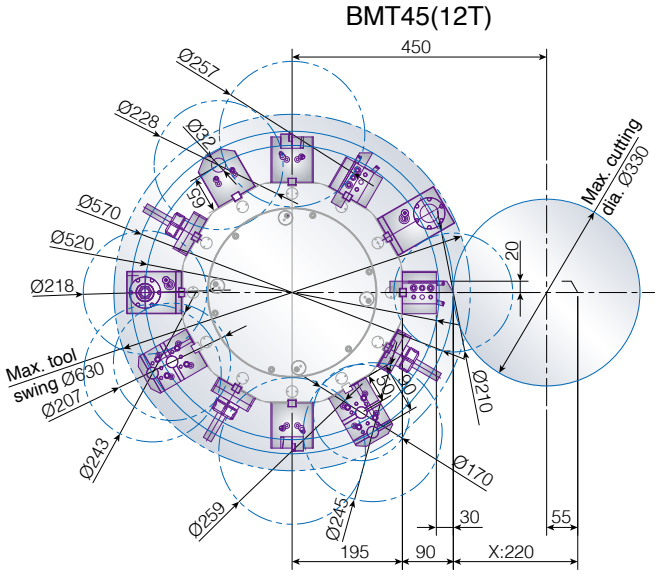

Y Axis Milling Area

Unit: mm

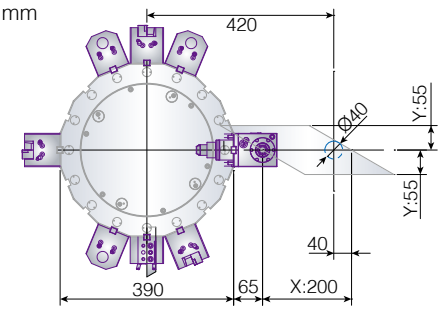

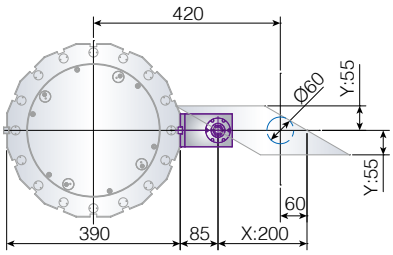

FNL-220LSY

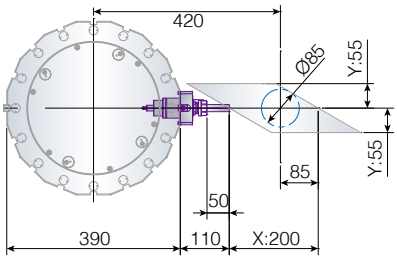

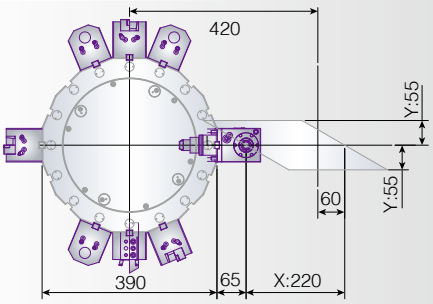

FNL-220LY / 220Y

Application Cases

Automobile Parts
Aluminum alloy

Motorcycle Parts
Aluminum alloy

Power Tool Parts
S45C

Machine Parts
S45C

Power Tool Casting
Aluminum alloy

Hydraulic Parts
Stainless steel

Fitness Equipment Parts
Aluminum alloy

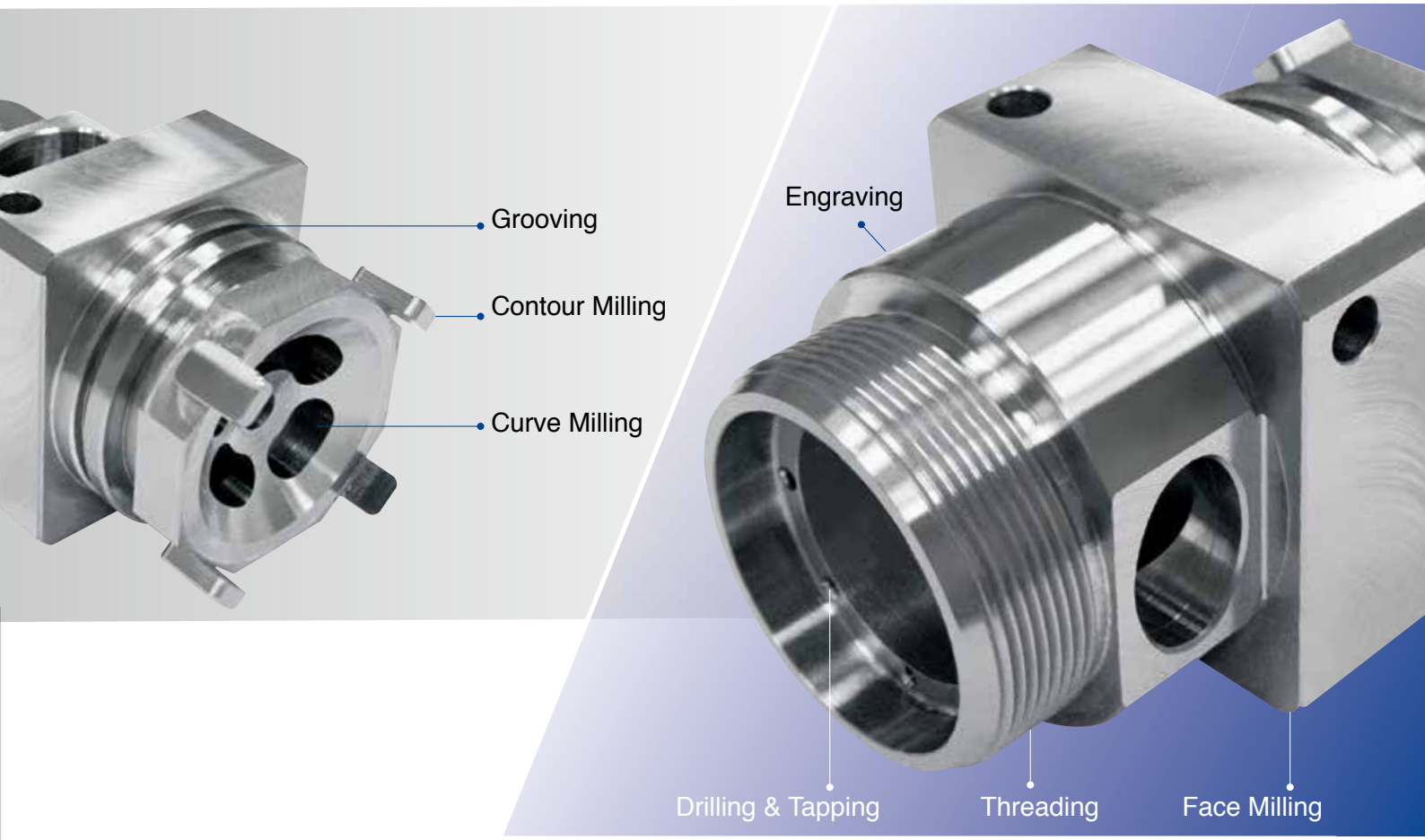

Machine Specifications

Item		Unit	FNL-220LS	FNL-220LSMC	FNL-220Y	FNL-220LY	FNL-220LSY
Capacity	Swing over bed	mm	620		620		
	Swing over saddle	mm	560		620		
	Max. cutting diameter	mm	330		270		
	Max. cutting length	mm	510		300	510	
	Chuck size	inch	6 / 8		6 / 8		
	Max. bar capacity	mm	52 / 65 (opt.)		52 / 65 (opt.)		
Axial Travel	X axis	mm	220		200		
	Z axis	mm	560		350	560	
	Y axis	mm	–		110 (±55)		
	B axis	mm	560		–		560
	C1, C2 axis	°	360 (C2 axis)	360	360		
Rapid Traverse Rate	X axis	m/min	30		30		
	Z axis	m/min	30		30		
	Y axis	m/min	–	10	10		
	B axis	m/min	20		–		20
	C1, C2 axis	RPM	200 (C2 axis)	200	200		
Main Spindle	Max. spindle speed	RPM	4500		4500		
	Spindle nose	ASA	A2-6		A2-6		
	Through-hole diameter	mm	62 / 77 (opt.)		62 / 77 (opt.)		
	C axis positioning resolution	°	–	0.001	0.001		
Turret	Number of tools	ea	12 / 16 (opt.)		12 / 16 (opt.)		
	Turret type		Servo BMT45	Power BMT45	Power BMT45		
	OD tool size	mm	20 x 20		20 x 20		
	Boring bar size	mm	32		32		
	Tool change time	sec	0.16 (T-T)		0.16 (T-T)		
	Max. speed of live tooling	RPM	–	4000	6000 (Fanuc) / 4500 (Siemens)		
Tailstock	Quill dia.	mm	–		85		–
	Center taper		–		MT5		–
	Center travel	mm	–		100		–
	Tailstock travel (Saddle driven)	mm	–		350	560	–
Sub-spindle	Max. spindle speed	RPM	6000		–		6000
	Spindle nose	ASA	A2-5		–		A2-5
	Chuck size	inch	6		–		6
	Through-hole diameter	mm	56		–		56
	Bar capacity	mm	45		–		45
	C axis positioning resolution	°	0.001		–		0.001
Motor	Main spindle (Cont. / 30mins)	kW	11 / 15		11 / 15		
	Sub-spindle	kW	5.5 / 7.5		–		5.5 / 7.5
	Live tooling	kW	–	3.7 / 5.5	3.7 / 5.5		
Coolant Tank	Capacity	L	210		210		
Power	Rated power	kVA	30		30		
Machine Dimension	Height	mm	1784		2122		
	Length	mm	4070		3731	4109	
	Width	mm	1887		1954		
	Weight	kg	5000	5300	5300	5700	5900
Controller			Fanuc 0i series / Siemens 828D		Fanuc 0i series / Siemens 828D		

Standard & Optional Accessories

● Standard Accessories
△ Optional Accessories

Item	FNL-220LS	FNL-220LSMC	FNL-220Y	FNL-220LY	FNL-220LSY
8" hydraulic chuck	●	●	●	●	●
6" hydraulic chuck (sub spindle)	●	●	–	–	●
Hard jaws (set)	8" x 1 6" x 1	8" x 1 6" x 1	8" x 1	8" x 1	8" x 1 6" x 1
Soft jaws (set)	8" x 1 6" x 1	8" x 1 6" x 1	8" x 1	8" x 1	8" x 1 6" x 1
Boring bar holder	3	3	3	3	3
Bidirectional boring bar holder	1	1	–	–	1
Bidirectional OD & facing holder	1	1	–	–	1
Facing holder	1	1	1	1	1
OD & facing holder	3	3	3	3	3
Extended OD & facing holder	1	1	1	1	1
Radial milling head	△	△	△	△	△
Axial milling head	△	△	△	△	△
High speed radial milling head	△	△	△	△	△
High speed axial milling head	△	△	△	△	△
Bidirectional axial milling head	△	△	△	△	△
Tool sleeve Ø 8 ~ 25 (set)	1	1	1	1	1
Coolant system	●	●	●	●	●
Moveable coolant tank	●	●	●	●	●
Leveling bolts and pads	●	●	●	●	●
Centralizing lubrication system	●	●	●	●	●
Working lamp	●	●	●	●	●
3-Color warning light	●	●	●	●	●
Foot pedal for hydraulic chuck	●	●	●	●	●
Tool kits (set)	●	●	●	●	●
Handwheel	●	●	●	●	●
Chip conveyor	●	●	●	●	●
Coolant pump	●	●	●	●	●
MT5 live center	–	–	●	●	–
Programmable tailstock	–	–	●	●	–
Parts catcher	△	△	△	△	△
Manual tool setter (main spindle)	△	△	△	△	△
Manual tool setter (sub-spindle)	△	△	–	–	△
Auto. tool setter (main spindle)	△	△	△	△	△
Oil skimmer	△	△	△	△	△
Oil-mist collector	△	△	△	△	△
Transformer	△	△	△	△	△
CE safety accessories	△	△	△	△	△
Manual Guide i (FANUC)	△	△	△	△	△
Shopturn (Siemens)	△	△	△	△	△
Automatic door	△	△	△	△	△
Foot pedal for tailstock	–	–	△	△	–
Bar feeder / interface	△	△	△	△	△
Collet chuck	△	△	△	△	△
Servo tailstock	–	–	–	△	–
Parts conveyor	△	△	△	△	△

STARTECH
Machinery
Polígono Malpica, Calle D, nave 166
50016 Zaragoza (España)
Tel: (+34) 976 571 213
www.startechmachinery.com
info@startechmachinery.com

Technology • Human-centered • Precision

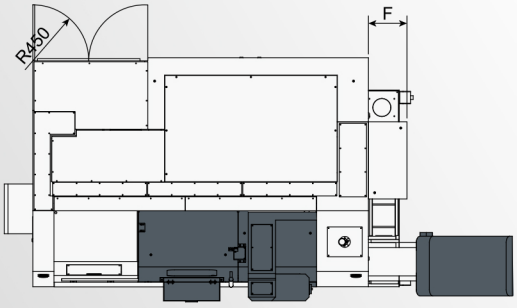

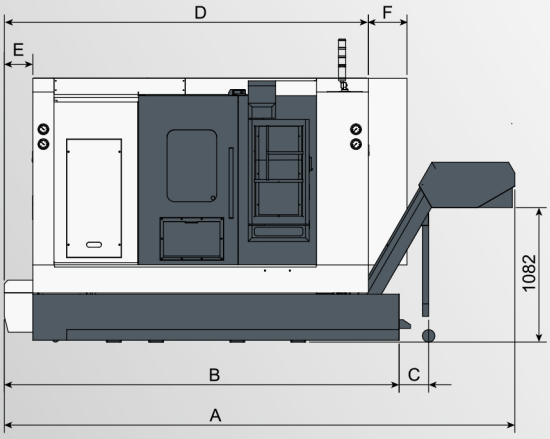

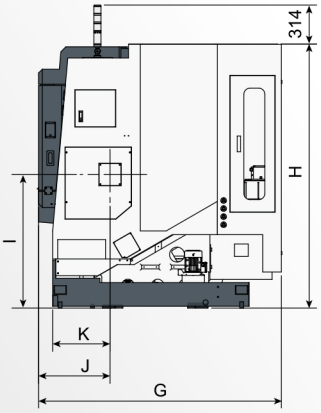

	A	B	C	D	E	F	G	H	I	J	K
FNL-220LY FNL-220LSY	4109	3178	485	2930	230	310	1954	2122	1074	575	461
FNL-220Y	3731	2756	515	2700	230	130	1954	2122	1074	575	461
FNL-220LS FNL-220LSMC	4070	3136	523	2850	190	307	1887	1784	990.5	556	459

Specifications are subject to change without notice