Standard & Optional accessories

● : Standard ○ : Option

Item \ Model	HMC500	HMC630	HMC800
BBT40/CAT40/DIN40	●	x	x
BBT50/CAT50/DIN50	x	●	●
15,000rpm, Built-in spindle	●	x	x
12,000rpm, Built-in spindle	x	●	●
60 tools capacity of tool magazine	●	○	○
40 tools capacity of tool magazine	x	●	●
Arm type tool change system	●	●	●
Mechanism encoder on X, Y, Z, B axes feed system	●	●	●
Hydraulic unit	●	●	●
Spindle oil cooling system	●	●	●
Centralize automatic lubrication system for 4 axes	●	●	●
Lubrication oil collection devices on all axes	●	●	●
Roof enclosure splash guard	●	●	●
Coolant system for standard flood coolant (including tank and pump)	●	●	●
Wash gun	●	●	●
Caterpillar type chip conveyor with bucket	●	●	●
Foundation leveling bolt with screws	●	●	●
Adjust tools with tool box	●	●	●
Sealed electronic cabinet with heat exchanger	●	●	●
Hinge type operator panel	●	●	●
Moveable handle wheel (MPG)	●	●	●
Work light	●	●	●
Operation cycle finish and alarm lights	●	●	●
RS 232 interface	●	●	●
Technical manuals	●	●	●
Transformer (400VAC/50Hz)	●	●	●
Blum Laser tool length measurement	○	○	○
Blum workpiece measurement system (Touch probe)	○	○	○
AICC II + Data Server	○	○	○
HEIDENHAIN Linear scale on 3 axes with air purge system	○	○	○
FAGOR Linear scale on 3 axes with air purge system	○	○	○
Coolant through spindle (w/regular tank) for 20 bar	○	○	○
Coolant through spindle (w/extra tank of 500 L) for 20 bar	○	○	○

** Product specifications and accessories are subject to change without notice.*

WELE

WELE MECHATRONIC CO., LTD
(http : //www.welegroup.com)

HEADQUARTERS:
No.458, Shinsing Rd., Hukou Town, Hsin-Chu County, Taiwan 303
TEL : +886-3-696-0360 (rep.) FAX : +886-3-696-0370

TAICHUNG BRANCH:
No.600, Sec. 4, Sanfeng Rd., Houli Dist., Taichung City 421, Taiwan
TEL : +886-4-2558-0762 FAX : +886-4-2558-2334

WELE MECHATRONIC (SU-ZHOU) CO., LTD.
No.16, Fuhua Rd., Changshu Economic Develop Zone, Changshu City, Jiangsu Province, Zip 215513, P.R. China
TEL: +86-512-5229-7868 FAX:+86-512-5229-7866
SALES: 150-5141-3969,150-5141-3981

P06/0002 Macis. TEL:04-24751535

WELE

We lead the way by a new business model

HMC SERIES

ISO 9001 ISO 14000 2013 TAMI Supreme Excellence Award

Horizontal Machining Center

WELE MECHATRONIC CO., LTD

HMC series

Feature

- Larger working range on this HMC series.
- 60 tool magazine and rapid ATC mechanism.
- Available for extended to FMS (Flexible Manufacture System).

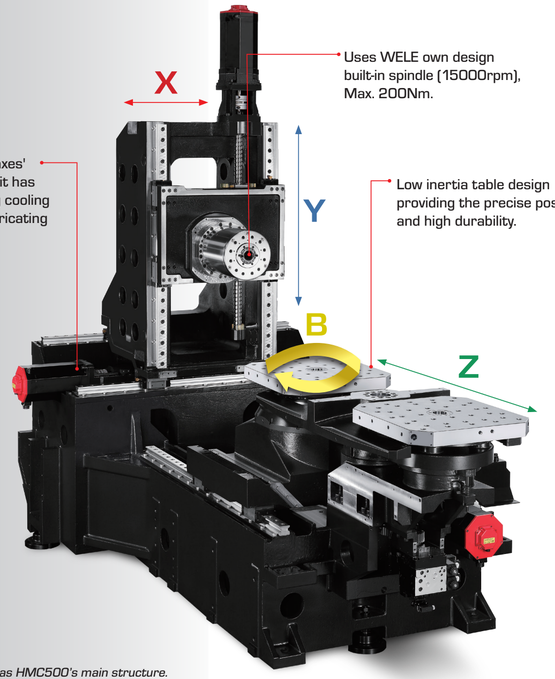

● *Above figure as HMC500's main structure.*

Spindle output torque power chart

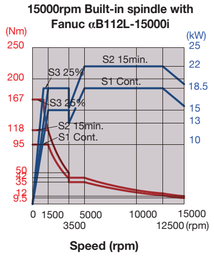

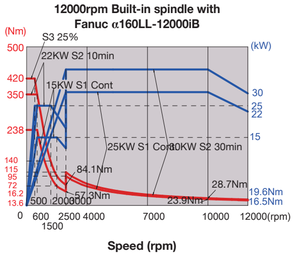

Friendly and compact design

Technical Specification

ITEM	unit	HMC500	HMC630	HMC800
Working travel:				
X axis	mm (in)	640 (25.19)	1050 (41.33)	1300 (51.18)
Y axis	mm (in)	610 (24.01)	900 (35.43)	1020 (40.15)
Z axis	mm (in)	680 (26.77)	870 (34.25)	1000 (393.70)
B axis	degree	0.001	1 (STD), 0.001 (OPT)	1 (STD), 0.001(OPT)
Working table - Pallet:				
Pallet size	mm (in)	500*500 (19.68*19.68)	630*630 (24.8*24.8)	800*800 (31.49*31.49)
Pallet load	kg (lb)	500 (1102)	1200 (2645)	1500 (3307)
Workpiece max. dimension - Dia. * Height	mm (in)	750*900 (29.52*35.43) for 2 APC	1050*1000 (41.33*39.37) for 2 APC	1300*1000 (51.18*39.37) for 2 APC
Distance of pallet working surface to floor	mm (in)	1100 (43.3)	1300 (51.18)	1300 (51.18)
Min. distance of spindle nose to table axis	mm (in)	100-780 (3.93-30.7)	150-1020 (5.9-40.15)	100-1100 (3.93-43.3)
Min. distance of spindle axis to table surface	mm (in)	50-660 (1.96-25.98)	75-975 (2.95-38.38)	75-1095 (2.95-43.11)
Pallet clamping force		12.5kN*4 cones	25kN*4 cones	25kN*4 cones
Max. torque of B axis	Nm	1600	8000	8000
Feed system				
G00 Rapid feed in X, Y, Z axes	mm/min (in/min)	60000 (2362.2)	60000 (2362.2)	50000 (1968.5)
Working feed/Rapid feed in B axis	rpm	33.3/ 1.1 sec./ 90 degree	22/ 2.2 sec./ 90 degree	22/ 2.2 sec./ 90 degree
G01 Cutting feedrate in X,Y,Z axes	mm/min (in/min)	20000 (787.4)	20000 (787.4)	20000 (787.4)
Spindle				
Spindle Taper		BBT40	BBT50	BBT50
Max. Speed	rpm	40-15000	20-12,000	20-12,000
Spindle driven		Built-in	Built-in	Built-in
Spindle rate Power	kW	22 (2min.)/ 18.5 (15min.)	30 (S2, 30min.), 25 (S1, cont.)	30 (S2, 30min.), 25 (S1, cont.)
Spindle rate Torque	Nm	200 (2min.)/ 150 (15min.)	420 (S3, 25%), 238 (S1, cont.)	420 (S3, 25%), 238 (S1, cont.)
Automatic Pallet Changer				
Number of Pallets	pcs	2	2	2
Pallet interchange time	sec	7	12	16
Automatic tool Changer				
Number of tools	pcs	60	40	40
with occupied adjacent tool pockets	mm (in)	95 (3.74)	115 (4.52)	115 (4.52)
without adjacent tools	mm (in)	185 (7.28)	270 (10.62)	270 (10.62)
Max. Length of tool	mm (in)	400 (15.74)	600 (23.62)	750 (29.52)
Max. weight of tool	kg (lb)	8 (17.63)	25 (55.1)	25 (55.1)
Tool interchange time (tool weight less than 12kg)	sec.	1.5 (2.5 sec. by heavy tool)	3 (4.7 sec. by heavy tool)	3 (4.7 sec. by heavy tool)
Chip to chip	sec.	3.6 (4.6 sec. by heavy tool)	5.8 (6.8 sec. by heavy tool)	6.2 (7.2 sec. by heavy tool)
Tank capacity (STD accesories)				
Hydraulic unit	liter	50	60	60
Coolant tank	liter	400	1000	1000
Lubrication tank	liter	1.8	3	3
Machine space requirement				
Machine dimension (L*W*H)	mm (in)	4580*2720*3070 (180.31*107.08*120.86)	6870*4105*3364 (270.47*161.61*132.44)	6920*4070*3680 (272.44*160.23*144.88)
Machine weight	kg (lb)	12,000 (26455)	18,200 (40124)	29,000 (63934)

** Product specifications and accessories are subject to change without notice.*